Work Order ID 73083

Thursday, August 25, 2011 1:25:01 PM

Ship Sept 9th

Item ID: D2001-4 **Accept** **Setup Start**

Revision ID: **Stop**

Item Name: Valve Assembly (1/4")

Start Date: 8/25/2011 **Start Qty:** 4.00 **Cust Item ID:**

Required Date: 9/5/2011 **Req'd Qty:** 4.00 **Customer:**

Reference:

Approvals: **Process Plan:** UMF **Date:** 11-08-25 **Tooling:** _____ **Date:** _____ **Run Start**

QC: _____ **Date:** _____ **SPC (Y/N):** _____ **Date:** _____ **Stop**

Sequence ID/ Work Center ID	Operation Description	Set Up/ Run Hours	Tool ID	Tool #	Plan Code	Accept Qty	Reject Qty	Reject Number	Insp. Stamp
Draw Nbr	**Revision Nbr**								
D2001	Rev C								
100	PURCHASING	0.00							
Purchasing									
Purchasing	**Memo** Issue P/O: 14745 P/N: 76-101-32 (1/4 NPT) Possible Supplier: Flo-Control Inc. Material release note is required	0.00							
110	Receive & Inspect for Damage & Mat'l Certs	0.00							
Packaging									
Packaging	**Memo** Ensure Material Release Note is attached	0.00							
120	QC6- Inspect dimensions to drawing	0.00							
QC									
Quality Control	**Memo**	0.00							

CL 11/08/25 4

11/9/8 (4)

11 09 08 (5)

Dart Aerospace Ltd

W/O:		WORK ORDER CHANGES					
DATE	STEP	PROCEDURE CHANGE	By	Date	Qty	Approval Chief Eng / Prod Mgr	Approval QC Inspector

Part No: _____ **PAR #:** _____ **Fault Category:** _____ **NCR:** Yes No **DQA:** _____ **Date:** _____

Resolution: _____ **Disposition:** _____ **QA: N/C Closed:** _____ **Date:** _____

NCR:		WORK ORDER NON-CONFORMANCE (NCR)						
DATE	STEP	Description of NC Section A	Corrective Action Section B			Verification Section C	Approval Chief Eng	Approval QC Inspector
			Initial Chief Eng	Action Description Chief Eng	Sign & Date			

NOTE: Date & initial all entries

H:\fFORMS\Quality Assurance\approved QA\NCRWO RevE

Work Order ID 73083

Thursday, August 25, 2011 1:25:01 PM

Item ID: D2001-4 **Accept** **Setup Start**

Revision ID:

Item Name: Valve Assembly (1/4") **Stop**

Start Date: 8/25/2011 **Start Qty:** 4.00 **Cust Item ID:**

Required Date: 9/5/2011 **Req'd Qty:** 4.00 **Customer:**

Reference:

Approvals: **Process Plan:** _____ **Date:** _____ **Tooling:** _____ **Date:** _____ **Run Start**

QC: _____ **Date:** _____ **SPC (Y/N):** _____ **Date:** _____ **Stop**

Sequence ID/ Work Center ID	Operation Description	Set Up/ Run Hours	Tool ID	Tool #	Plan Code	Accept Qty	Reject Qty	Reject Number	Insp. Stamp
130		0.00							
Small Fab	Small Fab								
Small Fab	**Memo**	0.00							
	Remove existing ID numbers and replace with Dart P/N & B/N								
140	QC5- Inspect part completeness to step on W/O	0.00							
QC	**Memo**	0.00							
Quality Control									
150	Identify as per dwg & Stock Location: 2	0.00							
Packaging	**Memo**	0.00							
Packaging									

11/09/08 4

SB 11/09/08 4

11/9/8 SB 4

Dart Aerospace Ltd

W/O:		WORK ORDER CHANGES					
DATE	STEP	PROCEDURE CHANGE	By	Date	Qty	Approval Chief Eng / Prod Mgr	Approval QC Inspector

Part No: _____ **PAR #:** _____ **Fault Category:** _____ **NCR:** Yes No **DQA:** _____ **Date:** _____

Resolution: _____ **Disposition:** _____ **QA: N/C Closed:** _____ **Date:** _____

NCR:		WORK ORDER NON-CONFORMANCE (NCR)						
DATE	STEP	Description of NC Section A	Corrective Action Section B			Verification Section C	Approval Chief Eng	Approval QC Inspector
			Initial Chief Eng	Action Description Chief Eng	Sign & Date			

NOTE: Date & initial all entries

H:\fFORMS\Quality Assurance\approved QA\NCRWO RevE

Work Order ID 73083

Thursday, August 25, 2011 1:25:01 PM

Item ID: D2001-4 **Accept** **Setup Start**

Revision ID:

Item Name: Valve Assembly (1/4") **Stop**

Start Date: 8/25/2011 **Start Qty:** 4.00 **Cust Item ID:**

Required Date: 9/5/2011 **Req'd Qty:** 4.00 **Customer:**

Reference:

Approvals: **Process Plan:** _____ **Date:** _____ **Tooling:** _____ **Date:** _____ **Run Start**

QC: _____ **Date:** _____ **SPC (Y/N):** _____ **Date:** _____ **Stop**

Sequence ID/ Work Center ID	Operation Description	Set Up/ Run Hours	Tool ID	Tool #	Plan Code	Accept Qty	Reject Qty	Reject Number	Insp. Stamp
160	QC21- Final Inspection - Work Order Release	0.00							
QC Quality Control	**Memo**	0.00							

11/9/12

MF
11-09-08

Dart Aerospace Ltd

W/O:		WORK ORDER CHANGES					
DATE	STEP	PROCEDURE CHANGE	By	Date	Qty	Approval Chief Eng / Prod Mgr	Approval QC Inspector

Part No: _____ **PAR #:** _____ **Fault Category:** _____ **NCR:** Yes No **DQA:** _____ **Date:** _____

Resolution: _____ **Disposition:** _____ **QA: N/C Closed:** _____ **Date:** _____

NCR:		WORK ORDER NON-CONFORMANCE (NCR)						
DATE	STEP	Description of NC Section A	Corrective Action Section B			Verification Section C	Approval Chief Eng	Approval QC Inspector
			Initial Chief Eng	Action Description Chief Eng	Sign & Date			

NOTE: Date & initial all entries

H:\fFORMS\Quality Assurance\approved QA\NCRWO RevE

Picklist Print

Thursday, August 25, 2011 1:24:55 PM

Work Order ID: 73083

Parent Item: D2001-4

Parent Item Name: Valve Assembly (1/4")

Start Date: 8/25/2011 **Required Date:** 9/5/2011

Start Qty: 4.00 **Required Qty:** 4.00

Comments: IPP A□04.07.06□New Issue□KJ/RF□□

Component Item ID/ Item Name	Replacement Item ID	Mfg/ Purch	Bin Item	Primary Location	Last Location	Route Seq ID	Unit of Measure	Qty on Hand	Qty per Kit	Total Qty	Qty Issued	Date Issued	Status
76-101-32 VALVE		Purchased	No			110	Each	0.0000	1	4	PO 4/3/8 (4)		

Dart Aerospace Ltd

W/O:		WORK ORDER CHANGES					
DATE	STEP	PROCEDURE CHANGE	By	Date	Qty	Approval Chief Eng / Prod Mgr	Approval QC Inspector

Part No: _____ **PAR #:** _____ **Fault Category:** _____ **NCR:** Yes No **DQA:** _____ **Date:** _____

Resolution: _____ **Disposition:** _____ **QA: N/C Closed:** _____ **Date:** _____

NCR:		WORK ORDER NON-CONFORMANCE (NCR)						
DATE	STEP	Description of NC Section A	Corrective Action Section B			Verification Section C	Approval Chief Eng	Approval QC Inspector
			Initial Chief Eng	Action Description Chief Eng	Sign & Date			

NOTE: Date & initial all entries

H:\fFORMS\Quality Assurance\approved QA\NCRWO RevE

DESIGN	DRAWN BY	DART AEROSPACE LTD HAWKESBURY, ONTARIO, CANADA	
CHECKED	APPROVED	DRAWING NO. D2001	REV. C SHEET 1 OF 1
DATE 04.07.06		TITLE VALVE ASSEMBLY	SCALE NTS

–	90.04.02	NEW ISSUE
A	92.05.12	–043 ADDED
B	96.04.10	DART P/N CHG,041–6,042–12,ADD –16
C	04.07.06	ADD D2001–4

RELEASED 04.09.09

SPECIFICATION CONTROL DRAWING

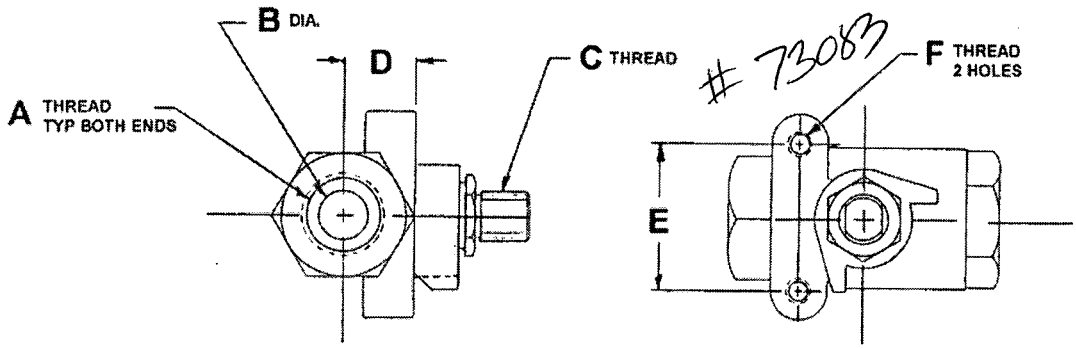

Dart P/N	Apollo P/N	A	B	C	D	E	F
D2001-4	76-101-32	1/4 NPT	0.370	3/8-24 NF	0.56	1.120	10-24 UNC
D2001-6	76-102-01	3/8 NPT	0.370	3/8-24 NF	0.56	1.120	10-24 UNC
D2001-8	76-103-01	1/2 NPT	0.500	3/8-24 NF	0.60	1.120	10-24 UNC
D2001-12	76-104-01	3/4 NPT	0.680	7/16-20 NF	0.79	1.370	10-24 UNC
D2001-16	76-105-01	1 NPT	0.870	7/16-20	0.99	1.370	10-24 UNC

NOTES:

1) POSSIBLE SUPPLIER: FLO-CONTROL INC. OR APOLLO VALVE DIVISION
2) DISCARD HANDLE AND ATTACHING NUT, EXCEPT FOR D2001-4
3) CHECK DIMENSION SHOWN ON THIS DRAWING
4) REFERENCE INFORMATION:
   MATERIAL: 316 STAINLESS STEEL
   INVESTMENT CAST COMPONENTS
   MEETS NACE-MR-01-75
   MEETS WW-V-35C TYPE II, COMP SS, STYLE 3
   PRESSURE RATING: 2000 PSI @ 100°F
   150 PSI @ 400°F
5) IDENTFY WITH DART P/N & B/N USING FINE POINT PERMANENT INK MARKER

Copyright © 1990 by DART AEROSPACE LTD

THIS DOCUMENT IS PRIVATE AND CONFIDENTIAL AND IS SUPPLIED ON THE EXPRESS CONDITION THAT IT IS NOT TO BE USED FOR ANY PURPOSE OR COPIED OR COMMUNICATED TO ANY OTHER PERSON WITHOUT WRITTEN PERMISSION FROM DART AEROSPACE LTD.

Dart Aerospace Ltd

W/O:		WORK ORDER CHANGES					
DATE	STEP	PROCEDURE CHANGE	By	Date	Qty	Approval Chief Eng / Prod Mgr	Approval QC Inspector

Part No: _____ **PAR #:** _____ **Fault Category:** _____ **NCR:** Yes No **DQA:** _____ **Date:** _____

Resolution: _____ **Disposition:** _____ **QA: N/C Closed:** _____ **Date:** _____

NCR:		WORK ORDER NON-CONFORMANCE (NCR)						
DATE	STEP	Description of NC Section A	Corrective Action Section B			Verification Section C	Approval Chief Eng	Approval QC Inspector
			Initial Chief Eng	Action Description Chief Eng	Sign & Date			

NOTE: Date & initial all entries

DART aerospace
Dart Aerospace Ltd.
1270 Aberdeen Street
Hawkesbury, ON K6A 1K7
Tel: 613 632 9577
Fax: 613 632 1053

PURCHASE ORDER

Purchase Order ID PO14745

Purchase Order Date 8/25/2011
PO Print Date 8/25/2011

Order From : VU-FL0001

FLO-CONTROL INC.
80 CENTER RD.
CARTERSVILLE, GA 30121
US

Contact Name		**Buyer**	Chantal Lavoie
Vendor Phone	770 382 0006	**Requisition Nbr**	
Vendor Fax	770 382 0161	**Tax Resale Nbr**	10127-2607
Vendor Account Nbr		**Terms**	Net 30
		Currency	USD
		FOB	Destination-Collect

Ship To : DART AEROSPACE LTD 1270 ABERDEEN
HAWKESBURY, ON K6A 1K7
CANADA

FAXED CL 4.0.8/05

Line Nbr	Reference / Revision / Vendor Part Number	Description/ Mfg ID	Req Date/ Taxable	Req Qty/ Unit of Measure	Ship Method	Unit Price	Extended Price
1	76-101-32	VALVE	8/31/2011 Yes	4.00 Each	FedEx PI collect	$48.8044	$195.22

Special Inst: AS PER DWG D2001 REV. C
B73083

PO Total: $195.22

CERTIFICATE OF CONFORMITY
REQ'D UPON DELIVERY

CL

No substitution or deviation without consent.
Certificate of Conformity or Material Certification required when applicable

Change Nbr: 1 **Change Date:** 8/25/2011

FLO-CONTROL, INC.
80 CENTER RD
CARTERSVILLE, GA 30121
PH: 770-382-0006, FAX: 770-382-0161
800-282-1870

APOLLO – CHECK-ALL – DURAVALVE - HERION - KOBOLD INSTRUMENTS – MARSH BELLOFRAM – WESTLOCK CONTROLS

FAX MESSAGE

DATE: 9/8/11

TO: Linda

CO: Dart Aerospace

FAX #:

FROM: Ana

RE: PO # PO 14745

NUMBER OF PAGES, INCULDING THIS COVER PAGE: 3

Linda:

Here's the packing slip + C of C. for order

Thanks

Ana

Conbraco Industries, Inc.
701 Matthews Mint Hill Rd.
Matthews, NC 28105
(704) 847 - 9191

"Apollo®" Valves
Manufactured by Conbraco Industries, Inc.

CONBRACO

Pit(s) STC Pcs

** ORIGINAL **

Sold To: FLO-CONTROL INC 80 CENTER RD CARTERSVILLE GA 30121 UNITED STATES	Ship To: DART AEROSPACE 1270 ABERDEEN HAWKESBURT ON K6A1K7 CANADA

Pieces:	1	Packed By:	SCOTTT
Weight:	3.20	Pack Date:	9/07/11
PPD/COL	C	Shipped By:	SHIPPRF
		Ship Date:	9/07/11
		PRO#	
		ASN#	67075000007526494

Customer No.	Cust. Order#	Order No.	Date Received	Salesman	Ship Via/Instructions
01004667	65961	C777376	8/31/11	4	FP01 FDX ACCT# 151793240

Line Number	Part Number	Part Description	Quantity Ordered	Quantity Shipped	Unit	Customer Part Number/Comments
		CONTACT TAG PO# P014745 AT PHONE:				
		FEDEX PRIORITY PER SHARONHAMER.				
1000	7610132A	BV,1/4"NPT,SS,SS TEE HNDL	4	4	EA	
1049	CERTIF01	CERTIFICATE OF COMPLIANCE	1	0	EA	Certificate of Compliance N/C
		SHIPPING LOCATION: PAGELAND DISTRIBUTION CENTER				
		1418 S. PEARL ST. PAGELAND, SC 29728				

PACKING SLIP

"Apollo" Valves
manufactured in the USA by CONBRACO Industries

ISO 9001:2008 REGISTERED

Manufactured by Conbraco Ind. Inc.
P. O. Box 125 Pageland S.C. 29728
Phone: [843] 672-6161
Fax: [843] 672-1648
www.apollovalves.com

Certificate of Compliance

Customer:	**FLO-CONTROL INC**	Date:	**8/31/2011**
PO #:	**65961**	Qty:	**4**
CII Order #:	**C 777378**		
Part #:	**7610132A**		
Description:	**BV,1/4"NPT,SS,SS TEE HNDL**		

This is to certify that the above materials comply with the requirements of the applicable purchase order and the codes and ratings shown in our published catalog of the "Apollo" valves, manufactured by Conbraco Industries Inc. or other specification as noted above. All products have met or exceed the inspection process.

Respectfully,

John F. Higdon

John F. Higdon
Corporate Quality Assurance Manager

PQA049